MLT-X627

TECHNICAL DATA SHEET

MANITOU

www.manitou.com

FT052EN_B_0114_MLTX627

MLT-X627

	20''/20'' C*	24''
Lifting capacity at 500 mm from forks heels	2700 kg	
Break out force	4160 daN	
Lifting height	5.50 m	5.55 m
Time: unladen/laden (in sec)		
Lifting	6.65/7.02	
Lowering	4.88/4.87	
Extension	4.80/4.85	
Retraction	3.02/3.34	
Crowd	3.16	
Dump	2.99	
Tyres	400/70 R20	460/70 R24
Forks (mm)		
Length x width x thickness	1200 x 125 x 45	
Carriage rotation	154°	
Braking	multiple-disk brake with oil bath on front and rear axles	
PERKINS STAGE III A engine	1104D-44T	
Capacity	Turbo 4 cyl./4400 cm³	
Power at 2200 rpm (ISO/TR 14396)	101 HP/74.5 kW	
Max. torque at 1400 rpm (ISO/TR 14396)	392 Nm	
Injection	direct	
Cooling	water	
Transmission	torque converter	
Speed forward and reverse	4/4	
Max. travel speed	28 kph**	32 kph**
Hydraulics		
Gear pump	100 l/min - 260 bar	
Capacities		
Hydraulic oil	98 l	
Fuel tank	104 l	
Unladen weight (with forks)	5935 kg	
Width overall	W	
Height overall	U1	
Length overall	D	
Turning radius (outer wheels)	V2	
Ground clearance	G	
Drawbar pull	up to 7100 daN	

Maximum height reach:

As per standard EN 1459 annex B

20''/20''C : 0.90 m

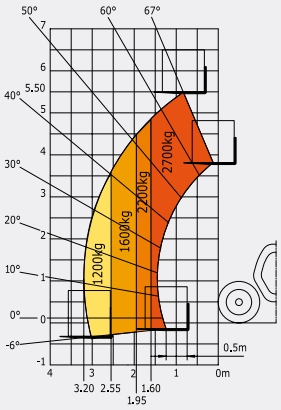

24'' : 0.75 m

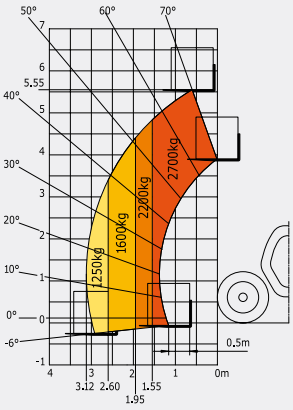

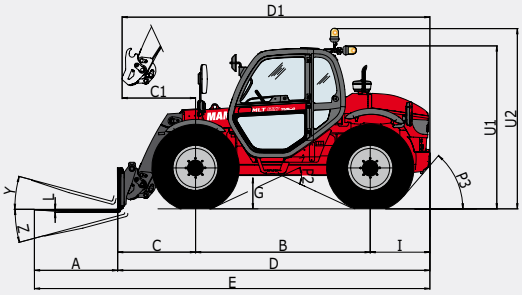

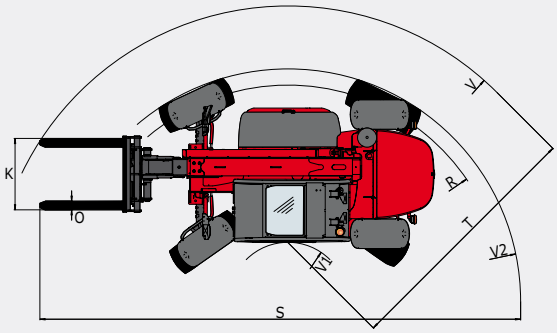

	20''	20''C	24''
	mm		
A	1200		
B	2520		
C	1307		
C1	1260		
D	4687		
D1	4640		
E	5887		
F	1600		1720
G	400		490

	20''	20''C	24''
I	860		
J	866		
K	1260		
L	45		
O	125		
P2	41°		50°
P3	39°		49°
R	3385		3405
S	7356		7395
T	3520		3545

	20''	20''C	24''
U1	2210	2060	2300
U2	2470	2320	2560
V	4770		4750
V1	1250		1205
V2	3589		3628
W	2007		2165
Y	11.8°		
Z	142°		

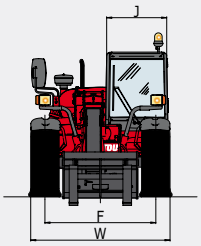

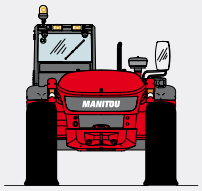

This brochure describes versions and configuration options for Manitou products which may be fitted with different equipment. The equipment described in this brochure may be standard, optional or not available depending on version. Manitou reserves the right to change the specifications shown and described at any time and without prior warning. The manufacturer is not liable for the specifications given. For more information, contact your Manitou dealer. Non-contractual document. Product descriptions may differ from actual products. List of specifications is not comprehensive. The logos and visual identity of the company are the property of Manitou and may not be used without authorisation. All rights reserved. The photos and diagrams contained in this brochure are provided for information only.
MANITOU BF SA - Limited company with board of directors - Share capital: 39,547,824 euros - 857 802 508 RCS Nantes

*20''C: MLT 627 20'' Compact = machine fitted with 20'' wheels and a lowered cab.
**May vary according to applicable regulations.